SSL56BF SMBF

Surface Mount Schottky Barrier Rectifier

Reverse Voltage - 60 V

Forward Current - 5 A

Pinning

1.Cathode	2.Anode



SMBF

Marking Code	
SSL56BF	YFW SL56B

FEATURES

Metal silicon junction, majority carrier conduction

For surface mounted applications

Low power loss, high efficiency

High forward surge current capability

For use in low voltage, high frequency inverters,

free wheeling, and polarity protection applications

Lead free in comply with EU RoHS 2011/65/EU directives

MECHANICAL DATA

Case: SMBF

Terminals: Solderable per MIL-STD-750, Method 2026

Approx. Weight: 57mg /0.002oz

Absolute Maximum Ratings and Electrical characteristics

Ratings at 25 ° ambient temperature unless otherwise specified.Single phase, half wave, 60Hz resistive or inductive load, for capacitive load, derate by 20 %

Parameter	Symbols	SSL56BF	Units
Maximum Repetitive Peak Reverse Voltage	V_{RRM}	60	V
Maximum RMS voltage	V_{RMS}	42	V
Maximum DC Blocking Voltage	V_{DC}	60	V
Maximum Average Forward Rectified Current	$I_{F(AV)}$	5.0	A
Peak Forward Surge Current, 8.3ms Single Half Sine-wave Superimposed On Rated Load (JEDEC method)	I_{FSM}	150	A
Maximum Instantaneous Forward Voltage at 5 A	V_F	0.50	V
Maximum Instantaneous Reverse Current T_A = 25°C at Rated DC Reverse Voltage T_A = 100°C	I_R	1 50	mA
Typical Junction Capacitance (1)	C_j	800	pF
Typical Thermal Resistance (2)	$R_{\theta JA}$	40	°C/W
Operating Junction Temperature Range	T_j	-55 ~ +150	°C
Storage Temperature Range	T_{stg}	-55 ~ +150	°C

(1) Measured at 1 MHz and applied reverse voltage of 4 V D.C

(2) P.C.B. mounted with 2.0" X2.0" (5 X 5 cm) copper pad areas.

Fig.3 Typical Forward Characteristic

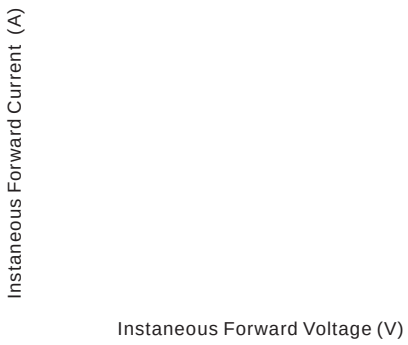

Fig.4 Typical Junction Capacitance

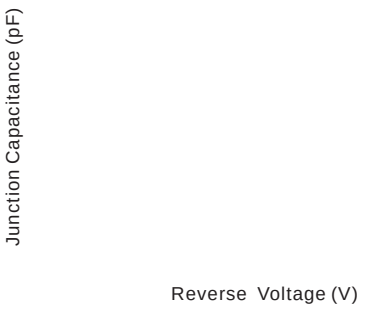

Fig.6- Typical Transient Thermal Impedance

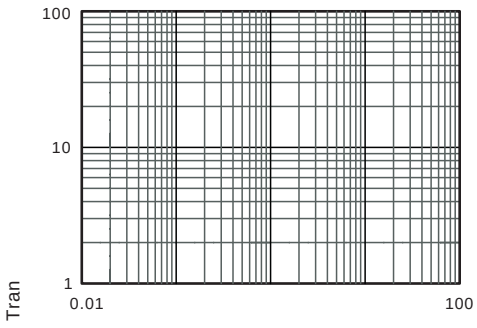

Marking Diagram

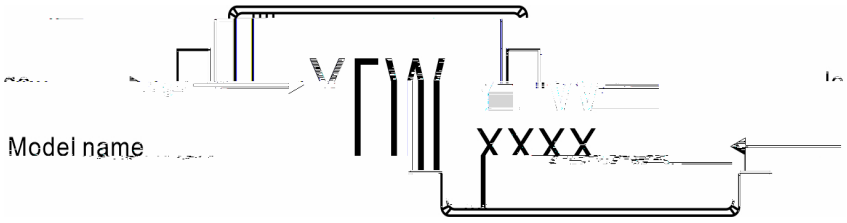

Ordering information

Package	Packing Description	Packing Quantity
SMBF	Tape/Reel,13"reel	5000PCS/Reel 50000PCS/Carton

Package Dimensions

SMBF

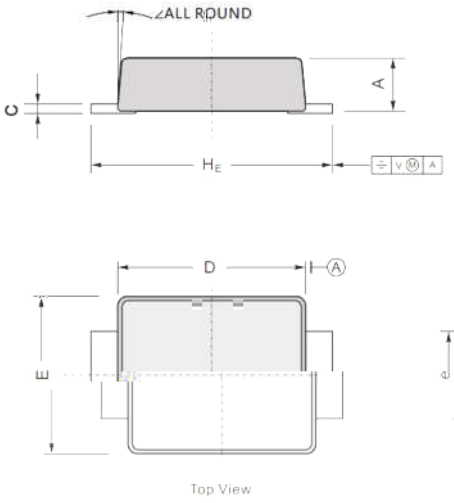

Dim.	Millimeter(mm)		mil	
	Min.	Max.	Min.	Max.
A	1.1	1.3	43	51
C	0.18	0.26	7	10
D	4.2	4.4	165	173
E	3.5	3.7	138	146
H_E	5.1	5.5	200	216
e	2.2	1.9	75	86
g	1.0		40	
	9°			

The recommended mounting pad size

