DO-214AA/SMB

SSL54B **YFW SSL54**

A

SSL54B

Fig.2 Typical Reverse Characteristics

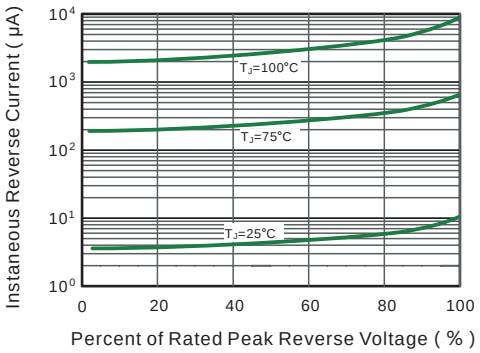

Fig.3 Typical Forward Characteristic

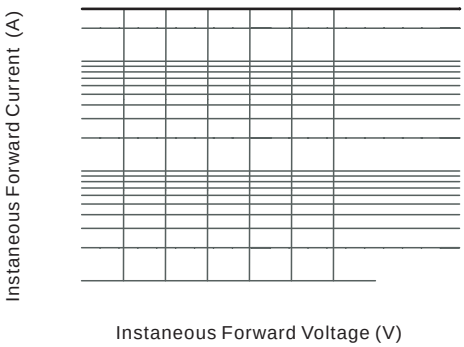

Fig.4 Typical Junction Capacitance

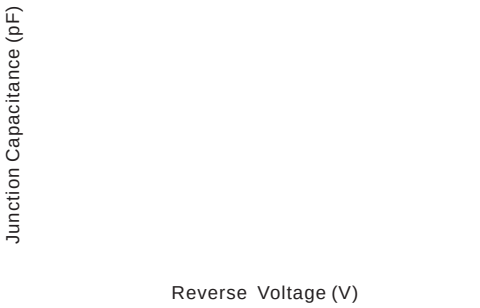

Fig.6- Typical Transient Thermal Impedance

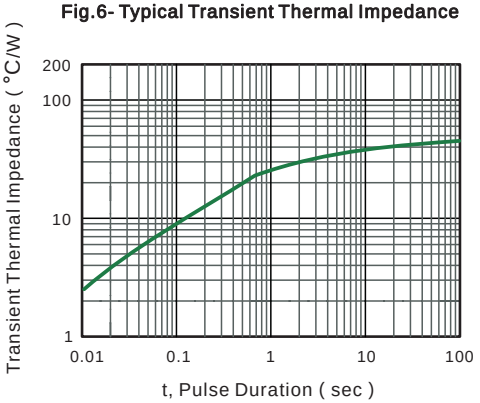

Marking Diagram

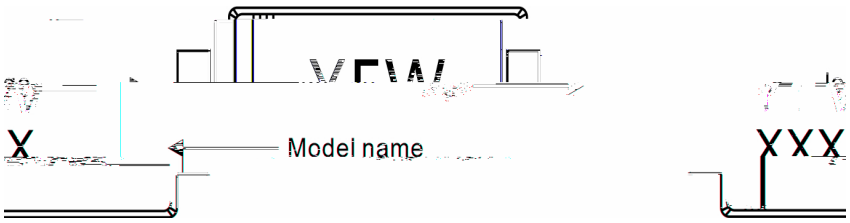

Ordering information

Package	Packing Description	Packing Quantity
DO-214AA SMB	!"#!!$%&'()!!$*	'+++,-."#!!$*'++++,-."-)/01*

Package Dimensions

DO-214AA SMB

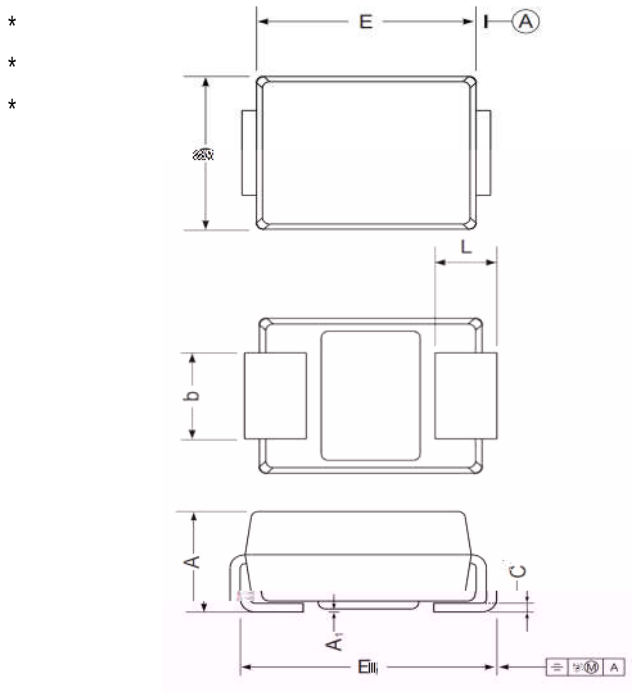

Dim.	Millimeter(mm)		mil	
	Min.*	Max.	Min.	Max.*
2*	34&'*	3455*	65*	78*
9*	54+8*	54:+*	&8+*	&6;*
<**	'4'*	'475*	&'+*	&;;*
9&*	;4+6*	;4;7*	3++*	33+*
2&*	+4+;*	+43+*	34+*	:47*
=*	+46*	&4;*	'3*	;7*
-*	+4&;3*	+4'+;*	8*	&3*
>*	&47*	343*	:;*	6:*

The recommended mounting pad size

