佑风微

MJD122 TO-252

Plastic-Encapsulate Transistors

Absolute Maximum Rating (Ta=25℃)

Electrical Characteristics (Ta=25℃

YFW
佑风微

MJD122 TO-252

Marking Diagram

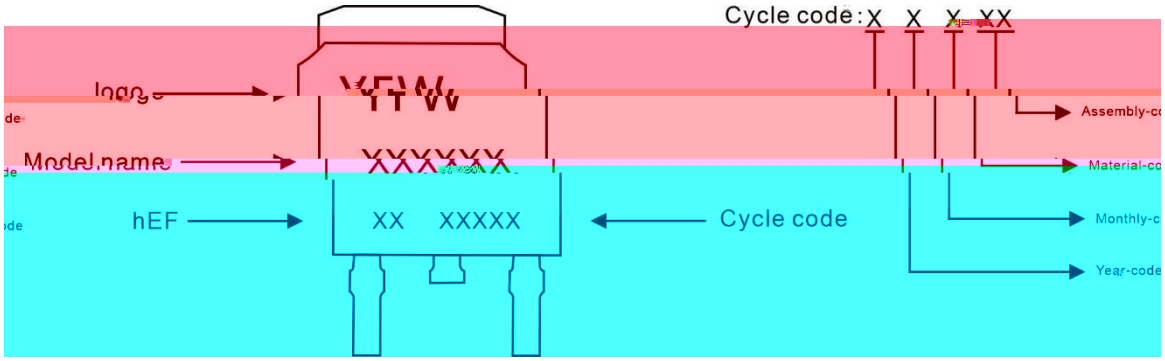

Ordering information

Model name	Package	Unit Weight	Base Quantity	Packing Quantity
MJD122	TO-252	0.011oz(0.32g)	2500pcs/reel	5000pcs/box 25000pcs/Carton

Package Dimensions

TO-252

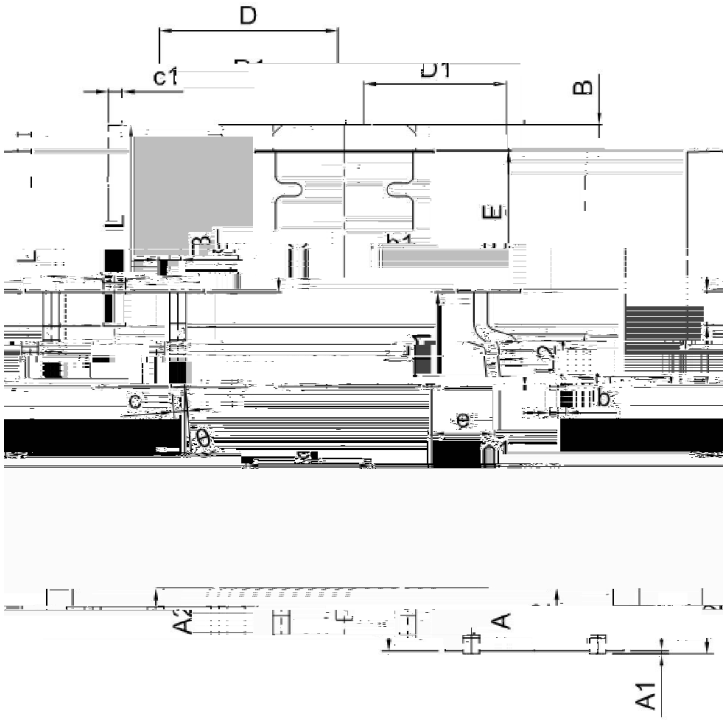

Dim	Millimeter		Inches	
	Min.	Max.	Min.	Max.
A	2.20	2.50	0.087	0.098
A1	0.00	0.12	0.000	0.005
A2	2.20	2.40	0.087	0.094
B	1.20	1.60	0.047	0.063
b	0.50	0.70	0.020	0.028
b1	0.70	0.90	0.028	0.035
c	0.40	0.60	0.016	0.024
c1	0.40	0.60	0.016	0.024
D	6.35	6.65	0.250	0.262
D1	5.20	5.40	0.205	0.213
E	5.40	5.70	0.213	0.224
e	2.20	2.40	0.087	0.094
e1	4.40	4.80	0.173	0.189
L	10.00	11.00	0.393	0.433
L1	2.70	3.10	0.106	0.122
L2	1.40	1.80	0.055	0.071
L3	0.90	1.50	0.035	0.059

The information presented in this document is for reference only. GuangDong Youfeng Microelectronics