1.0A Low-Dropout Linear Regulator

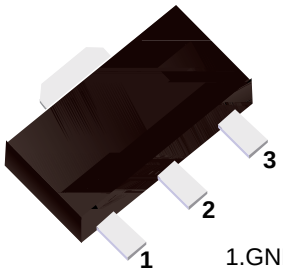

1.GND
2.OUT
3.IN

SOT-89

General Description

The YFW1117-1.8 positive fixed regulators are designed to provide 1A with high efficiency. All internal circuitry is designed to operate down to 1.4V input to output differential. On-chip trimming adjusts the reference voltage to1%. Current limit the typical value of 1.0A allows to minimize the stress on both the regulator and the power source circuitry under overload conditions

Features

- Available in 1.8V
- Space Saving SOT-89 Package
- Current Limiting and Thermal Protection
- Output Current 1A
- Temperature Range 0ęC to 125ęC
- Line Regulation 0.2% (Max)
- Load Regulation 0.4% (Max)

Applications

- High Efficiency Linear Regulators
- Post Regulators for Switching Supplies
- Adjustable Power Supply

Typical Application



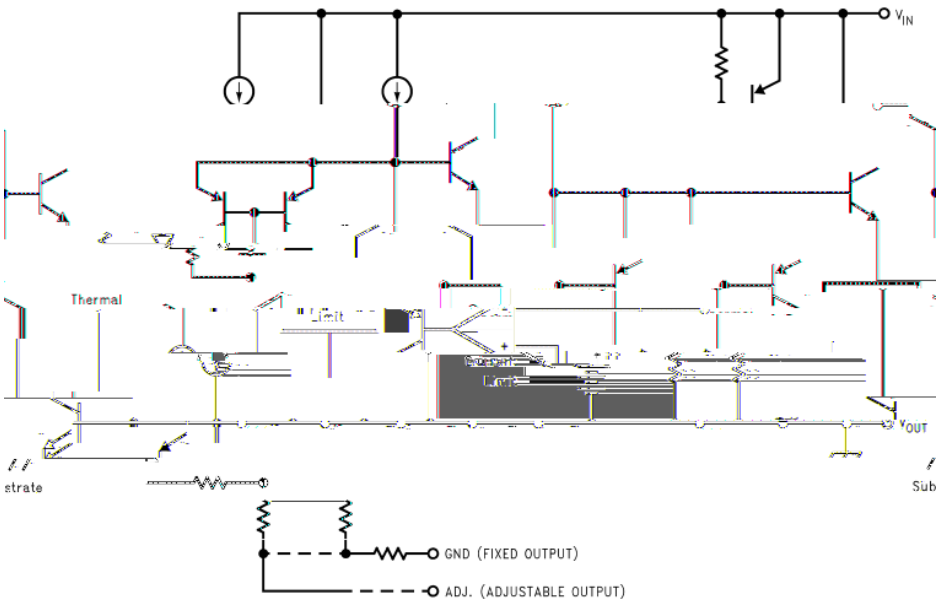

Absolute Maximum Ratings

Parameter	Symbol	Maximum	Unit
Power Dissipation	P_D	Internally Limited	W
Input Voltage	V_{IN}	15	V
Junction Temperature	T_J	150	
Operating Temperature	T_{OPR}	-40 125	
Storage Temperature	T_{STG}	-65 150	
Lead Temperature (Soldering, 10 sec)	T_{LEAD}	300	
Minimum ESD Rating (HBM)	V_{ESD}	2	kV

Electrical Characteristics

Parameter

( )842.6s9.9E9597.7 0.4799(r.cs347.168 12 re1 j 1.7D[(7 W
kV J ET 47785 6 79re f* 25MO d 1.85 701.65 23.88 r d


2841TJ

	Tape/Reel,7”reel	1000pcs/Reel	6000PCS/Box 30000PCS/Carton

The information presented in this document is for reference only. GuangDong Youfeng Microelectronics Co.,Ltd. reserves the right to make changes without notice for the specification of the products displayed herein to improve reliability, function or design or otherwise. The product listed herein is designed to be used with ordinary electronic equipment or devices, and not designed to be used with equipment or devices which require high level of reliability and the malfunction of with would directly endanger human life (such as medical instruments, transportation equipment, aerospace machinery, nuclear-reactor controllers, fuel controllers and other safety devices),YFW or anyone on its behalf, assumes no responsibility or liability for any damages resulting from such improper use of sale. This publication supersedes & replaces all information previously supplied. For additional information, please visit our website https://www.yfwdiode.com, or consult YFW sales office for further assistance.