| | |
|---|---|
| | |
| | |

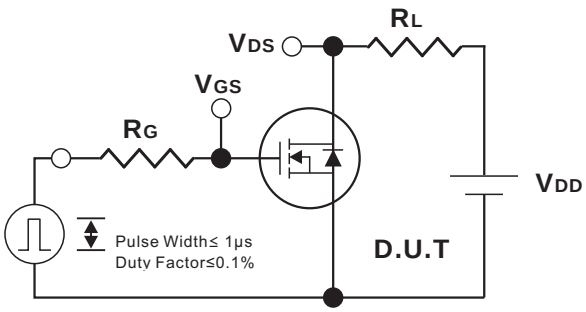


Switching Test Circuit

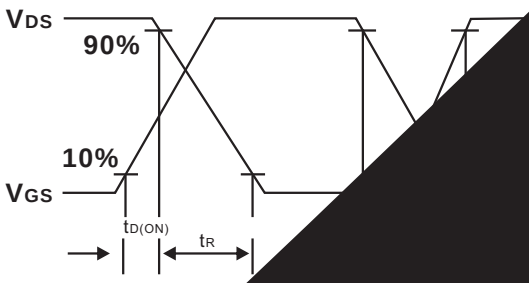


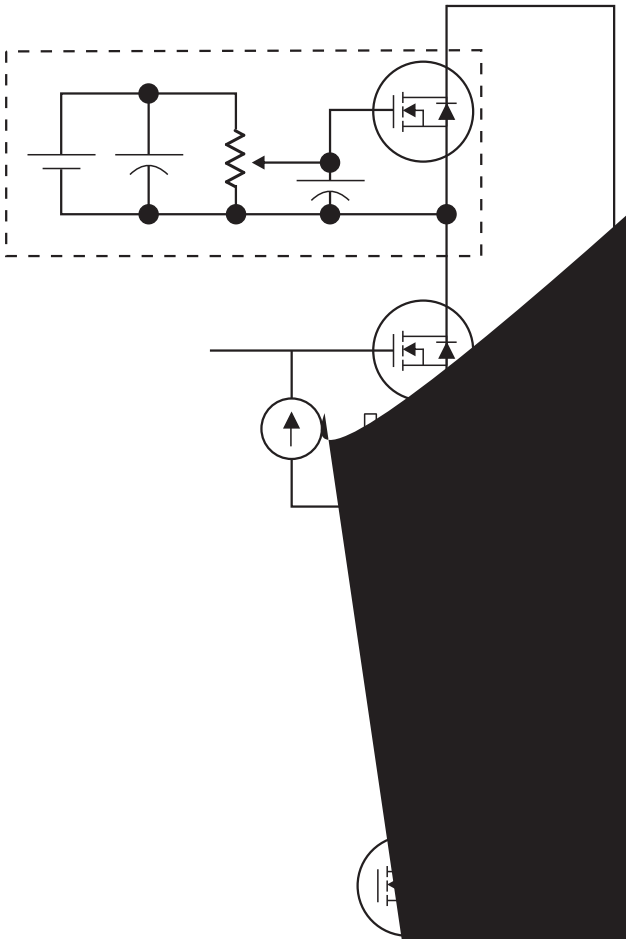

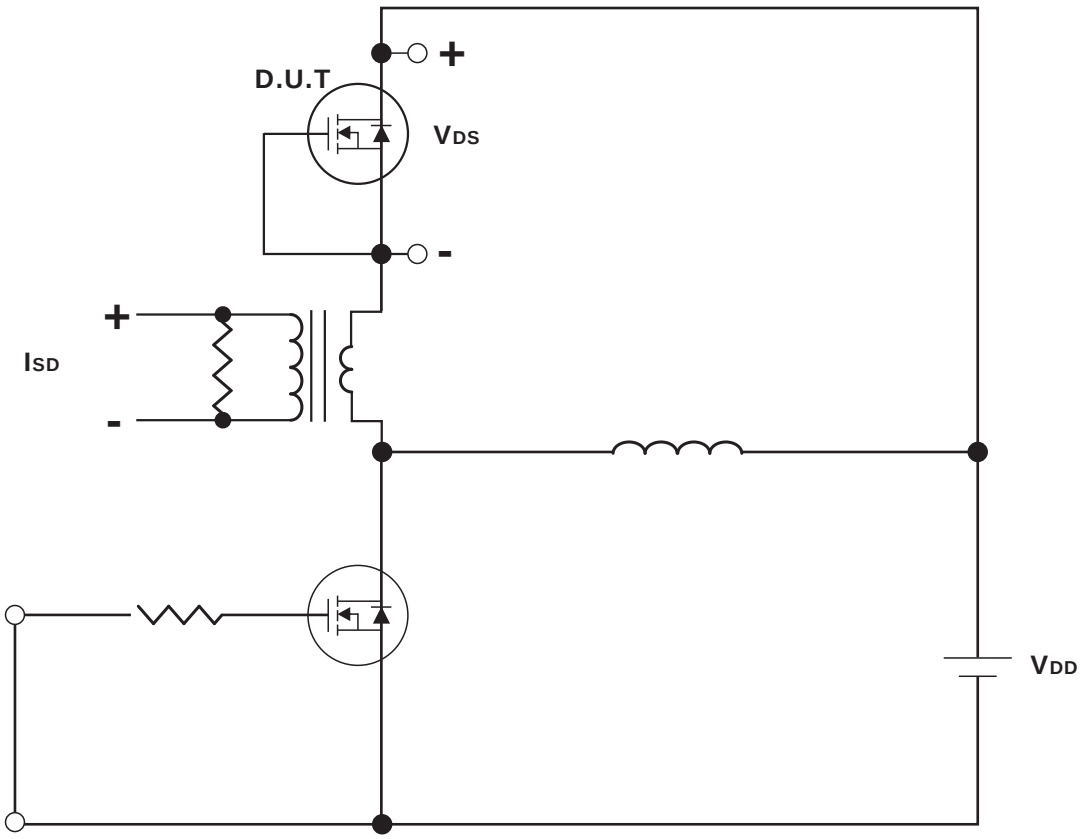
D.U.T
+
VDS
-
+
ISD
-
VDD

Fig.

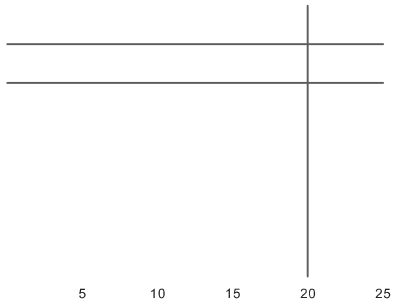

Fi

