ǎ ⅄ ⅄ ⅄ ᴄ⅄

ᵐᵒ ج

w̄ ⅄

⅄ ᴄ⅄ Â ⅄ ˘ ₹ ⅄ ч ˘ ˜

₹ ˘ ǐ ⅄ w ˘ ǐ

₹ Ḡ غ Ǐ ₹ ⅄ ⅄

˘ ɢ ⅄ ǎ غ Ḥ

ʟ Â



SOT-

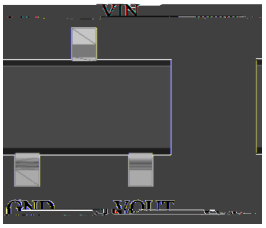

SOT23-3L

h

- ⅄ w
- ˜ ₹ ⅄ ⅄
-
- ⅄
- ĩ قمم
- ₹ ⅄ '
- ₹ Ḡ
- Ṇ˘ ₹ ⅄
-

ĩ قمم

- ⅄
- Ḥ
- ǎ

₹ w

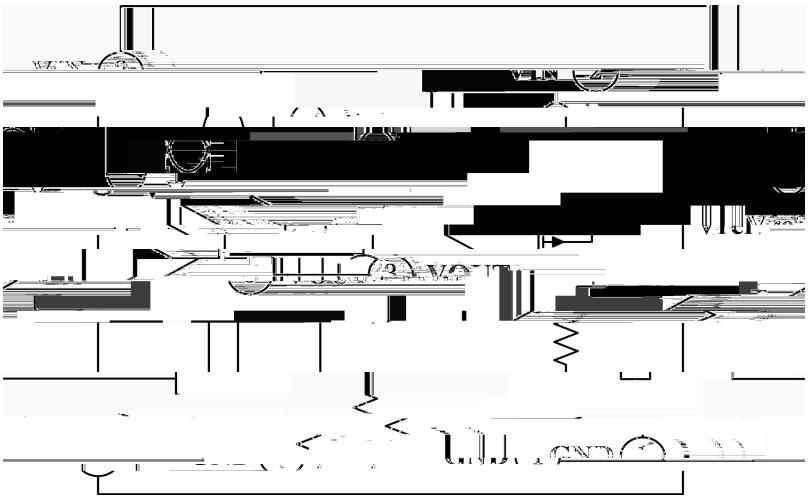

Ḥ

ǎ ˆ ≠ ’ Й˜ ˜

Ŧ ˛ˇ

			4.95	5.0	5.05	
				530		

Đ' ˘ ˘ ˘ Ņ

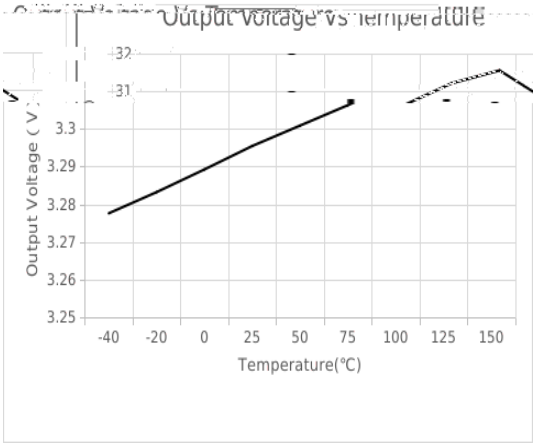
Output Voltage (V)
3.32
3.31
3.3
3.29
3.28
3.27
3.26
3.25
-40 -20 0 25 50 75 100 125 150
Temperature(℃)

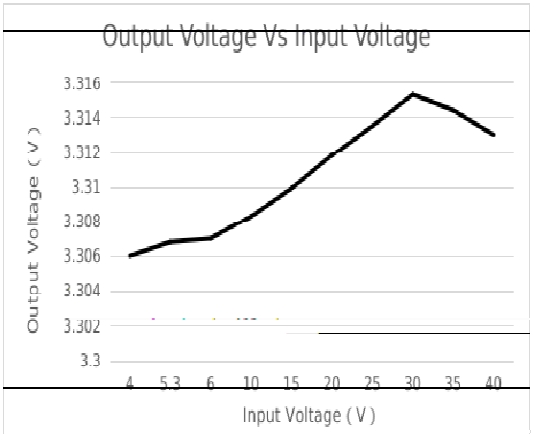
Output Voltage Vs Input Voltage
Output Voltage (V)
3.316
3.314
3.312
3.31
3.308
3.306
3.304
3.302
3.3
4 5.3 6 10 15 20 25 30 35 40
Input Voltage (V)

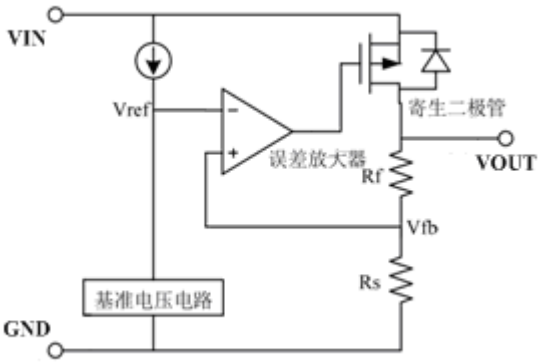
VIN
Vref
寄生二极管
误差放大器
VOUT
Rf
Vfb
Rs
基准电压电路
GND

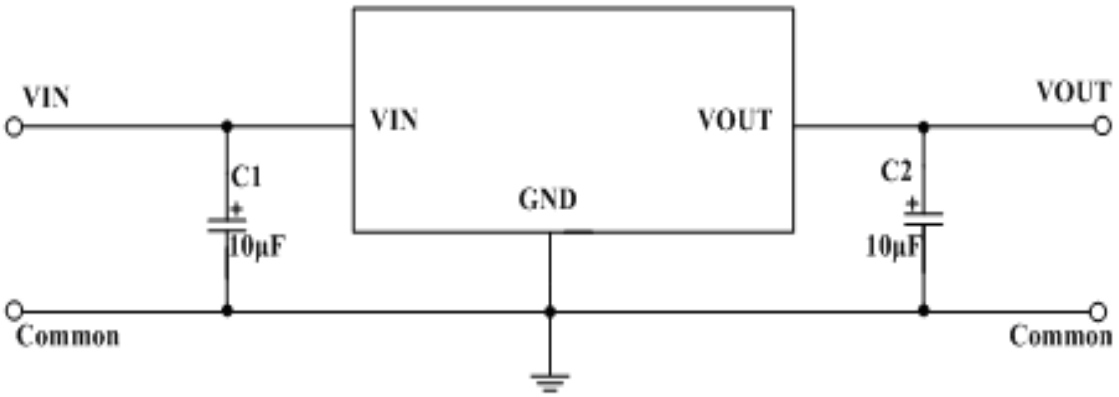
VIN
VIN
VOUT
VOUT
C1
GND
C2
10μF
10μF
Common
Common

The information presented in this document is for reference only. GuangDong Youfeng Microelectronics Co.,Ltd. reserves the right to make changes without notice for the specification of the products displayed herein to improve reliability, function or design or otherwise. The product listed herein is designed to be used with ordinary electronic equipment or devices, and not designed to be used with equipment or devices which