B-Terminal 1 Hold d . ๆ R n . ๆๆๆ m ๆ T ๆ

Electrical Characteristics (Ta = 25 °C)

(Refer to the test circuits, I_O=0.5A, V_I=-23V, C_I = 2

Typical Applications

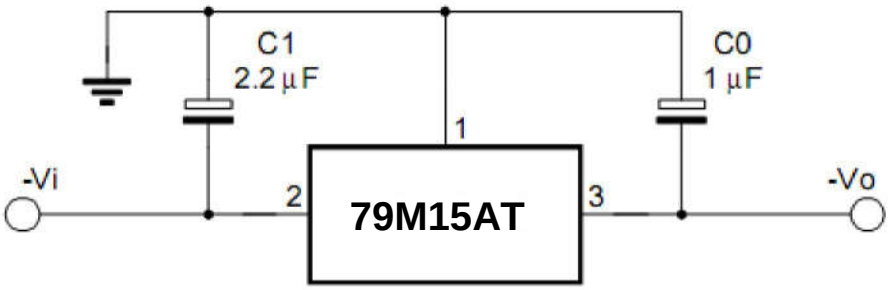

Fixed output regulator

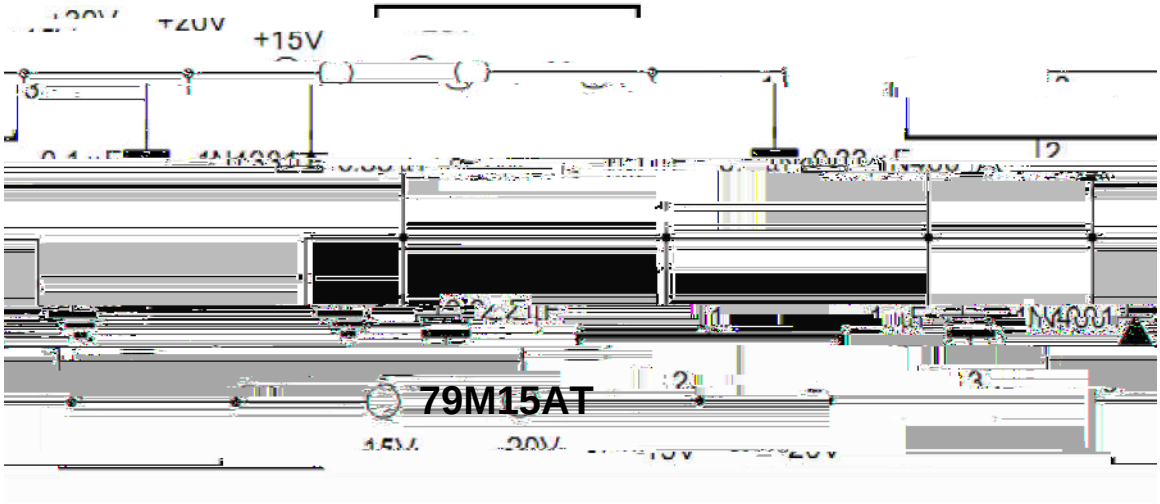

Split power supply(15V,1A)

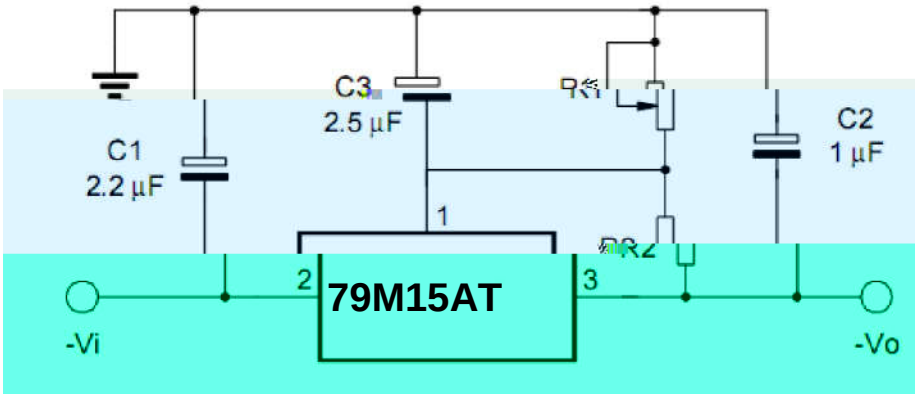

Circuit for increasing output voltage

Marking Diagram

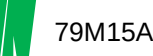

Discl