SIC SCHOTTKY BARRIER DIODE

Reverse Voltage - 650 V

Forward Current - 30 A

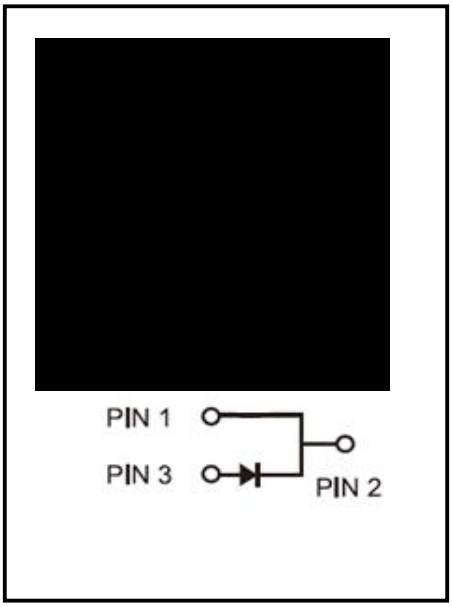

FEATURES

APPLICATIONS

BENEFITS

Maximum Ratings at T_C=25°C unless otherwise specified

Characteristics	Symbol	Value	Unit
	V_{RRM}		V
	I_F		A
			A
			A
	I_{FSM}		A
			A
	I_{FRM}		A
			A
	T_J		°C
	T_{STG}		°C
	$R_{\theta JC}$		°C/W

Electrical Characteristics unless otherwise specified

Characteristics		Symbol	Value			Unit
			Min	Typ	Max	
		V_{DC}				V
		V_F				V
		I_R				μA
						μA
		Q_C				nC
		C				pF
		E_C				μJ

Note2:Pulse test: 300 μs pulse

RATINGS AND CHARACTERISTIC CURVES

Figure 1. V_F Typical Forward Characteristics
I_F = 0~60A
T_{VJ} ranges from 25 ℃ to 175 ℃

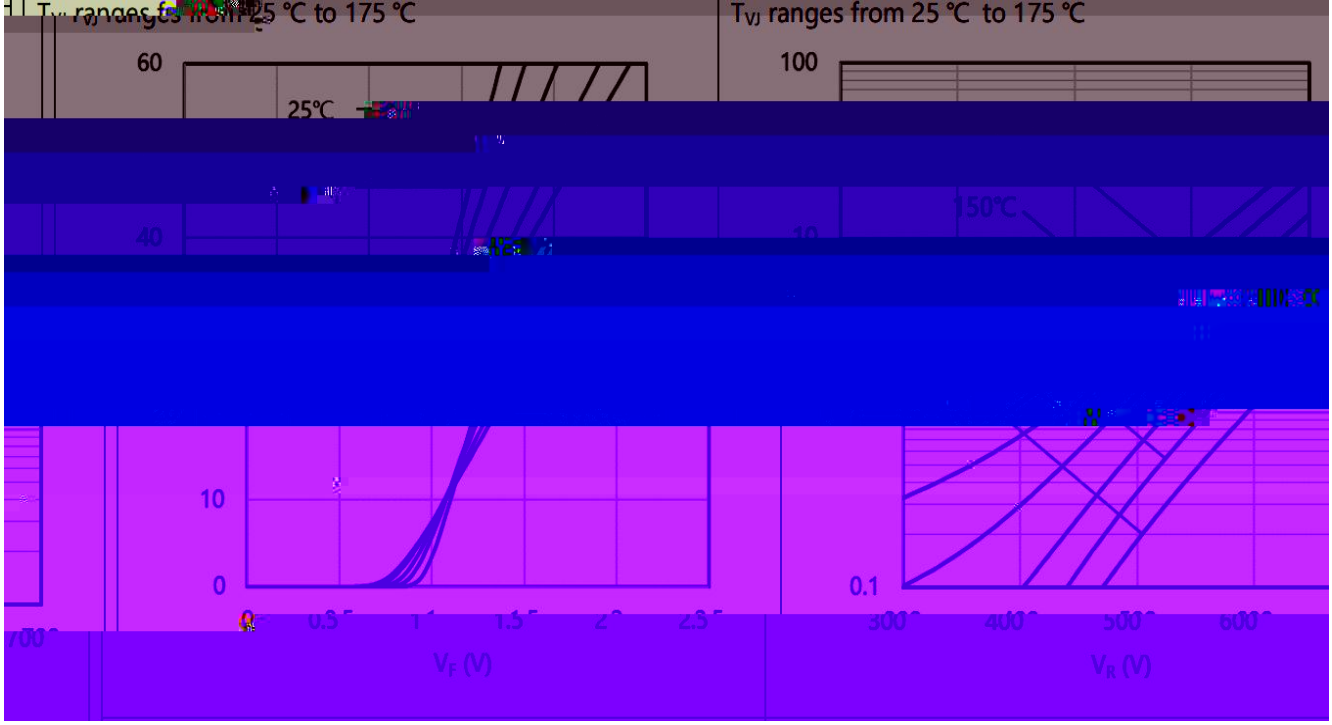

Figure 2. I_R Typical Reverse Characteristics
V_R = 300~700 V
T_{VJ} ranges from 25 ℃ to 175 ℃

Figure 3

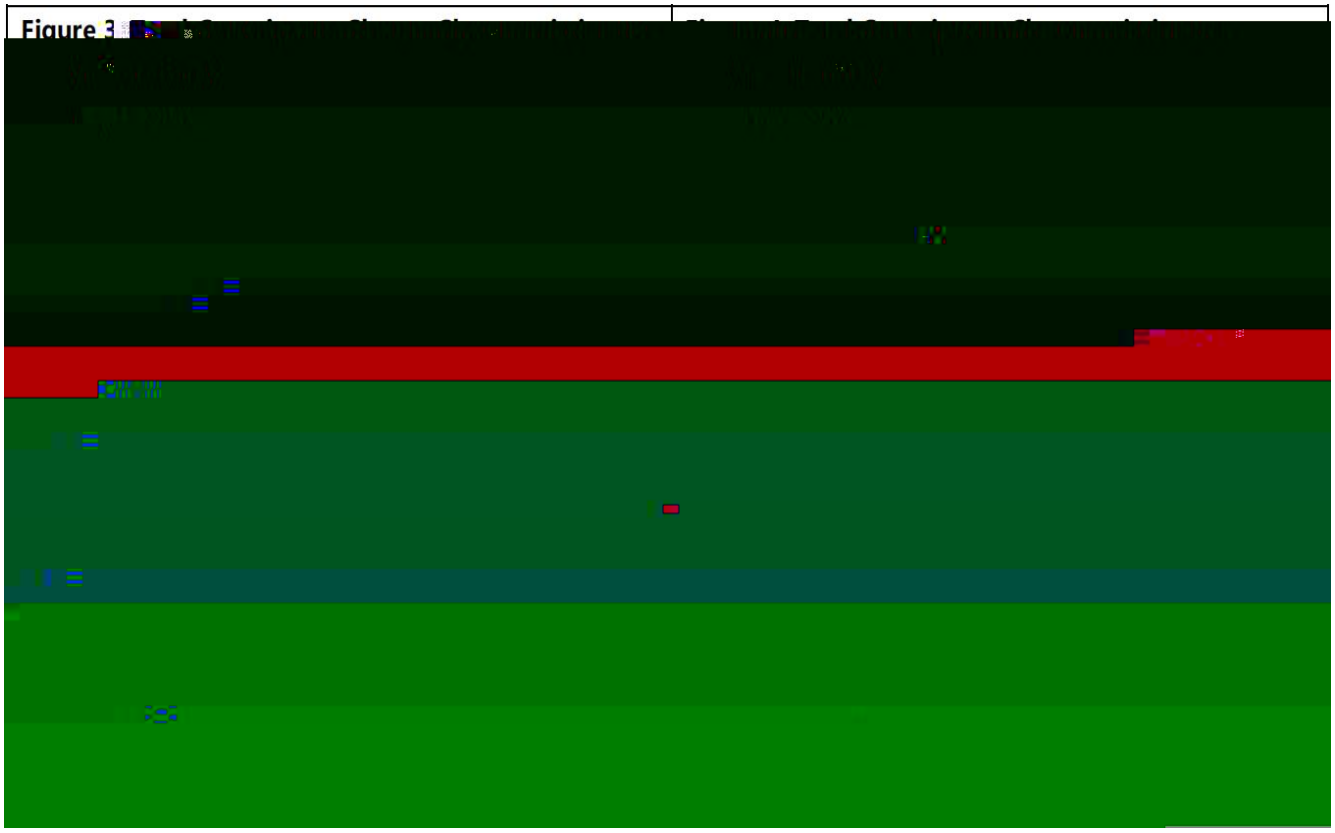

RATINGS AND CHARACTERISTIC CURVESU

Marking Diagram

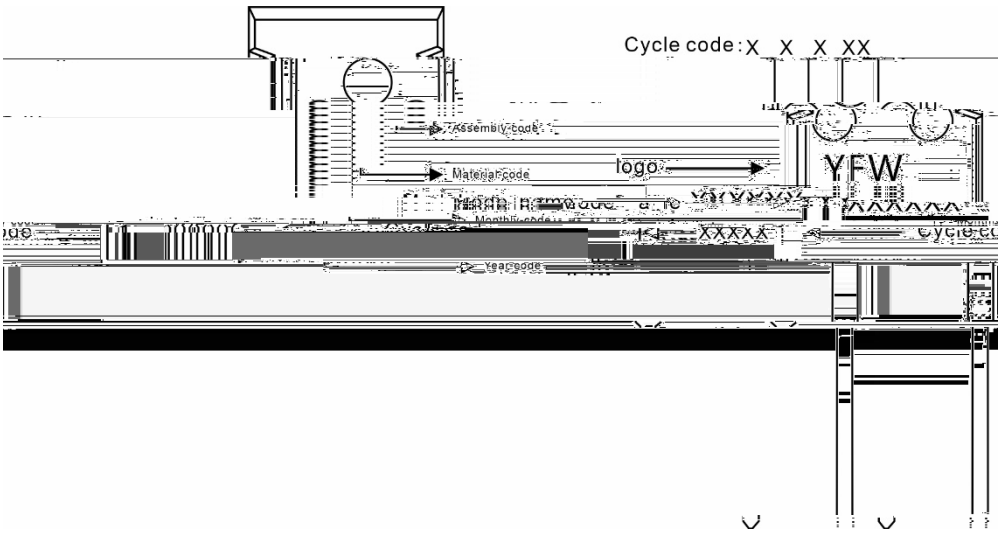

Ordering information

Model name	Package	Unit Weight	Base Quantity	Packing Quantity
	TO-247-2L	0.209oz(5.93g)	30pcs/tube	600PCS/Box 3000PCS/Carton

Package Dimensions

TO-247-2L

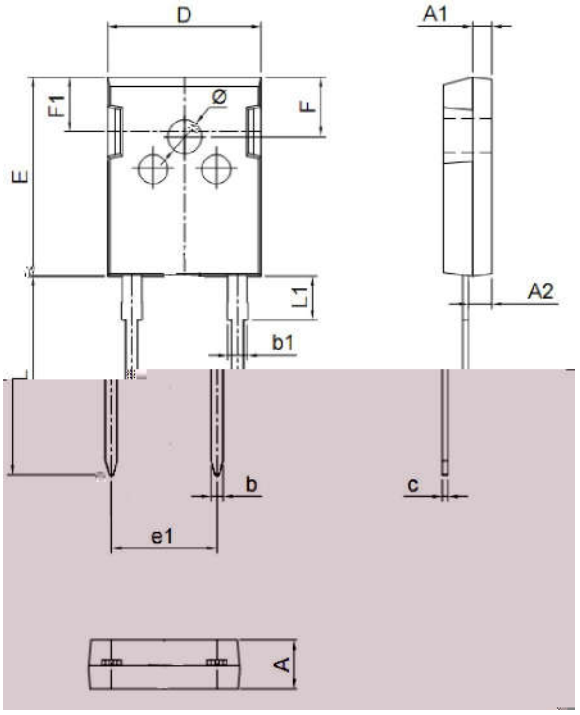

Symbol	Dimensions in mm		Dimensions in Inch	
	Min.	Max.	Min.	Max.
A	4.90	5.10	0.193	0.201
A1	1.90	2.10	0.075	0.083
A2	2.29	2.54	0.090	0.100
b	1.00	1.40	0.039	0.055
b1	2.00	2.20	0.079	0.087
c	0.50	0.70	0.020	0.028
D	15.75	16.05	0.620	0.632
E	20.20	20.80	0.795	0.819
e1	10.90 (BSC)		0.429 (BSC)	
F	6.05	6.25	0.238	0.246
F1	5.80	6.00	0.228	0.236
L	20.10	20.40	0.791	0.803
L1	4.05	4.35	0.159	0.171
Φ	3.50	3.70	0.138	0.146