Silicon Carbide Schottky Barrier Diode

Reverse Voltage - 650 V

Forward Current - 4 A

DESCRIPTION

APPLICATION

Electrical Characteristics

Parameter	Conditions	Symbol	Min	Typ	Max	Unit

Characteristics Curve

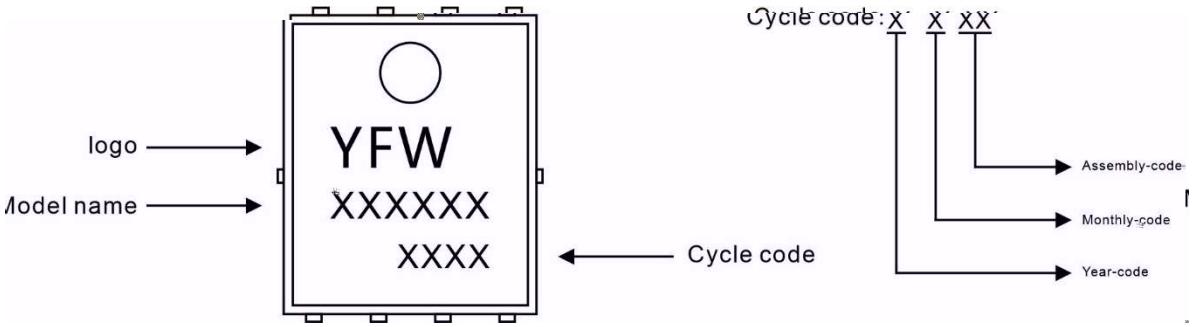
logo
Model name
YFW
XXXXXX
XXXX
Cycle code
Cycle code: X X XX
Assembly-code
Monthly-code
Year-code

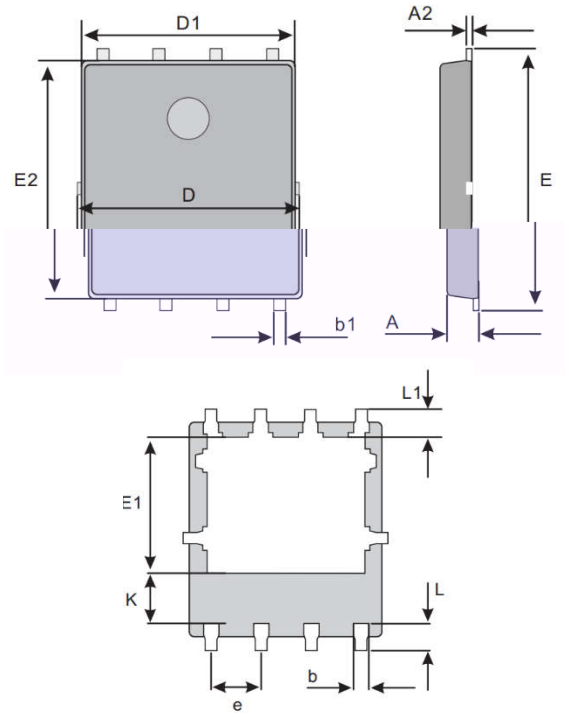
D1
A2
E2
D
E
b1
A
L1
E1
K
L
b
e
