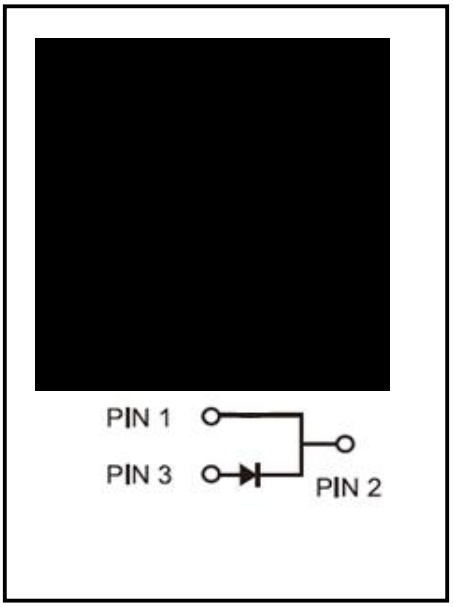
PIN 1
PIN 3
PIN 2

Figure 1. V_F Typical Forward Characteristics

I_F = 0~40A

T_{VJ} ranges fro

Figure 2. I_R Typical Reverse Characteristics

V_R = 0~1200 V

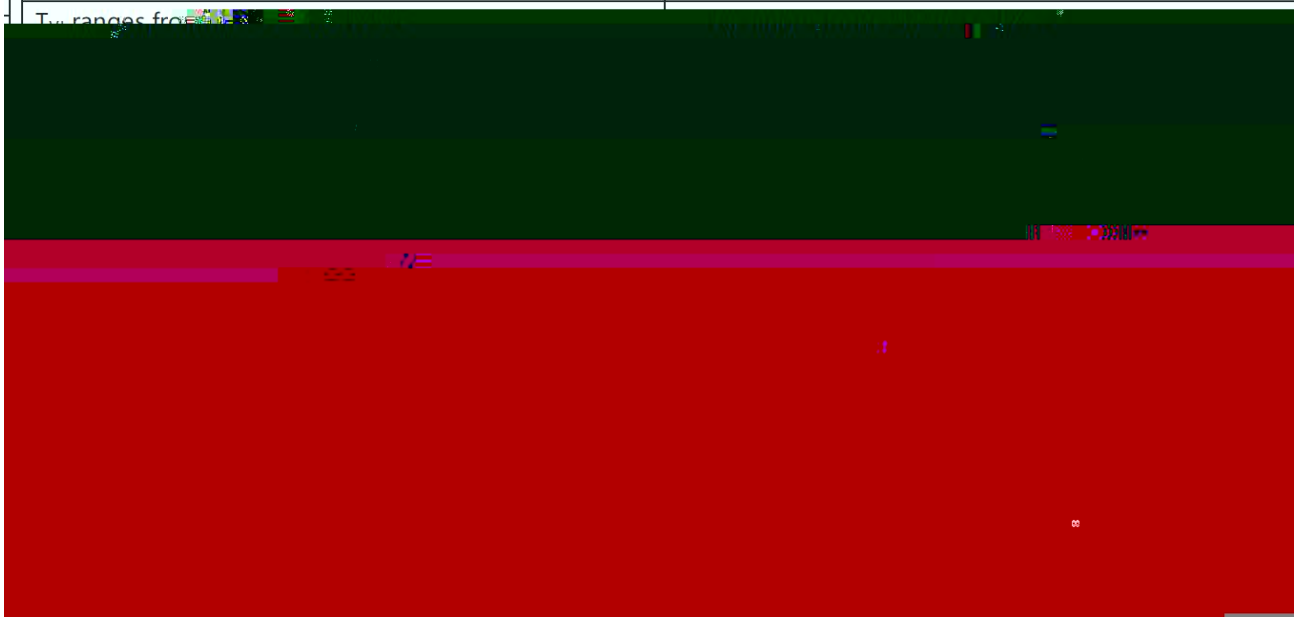

Figure 3. Typical Capacitance Charge Characteristics

= 0~800 V

Figure 4. Total Capacitance Characteristics

V_R = 0~1000 V

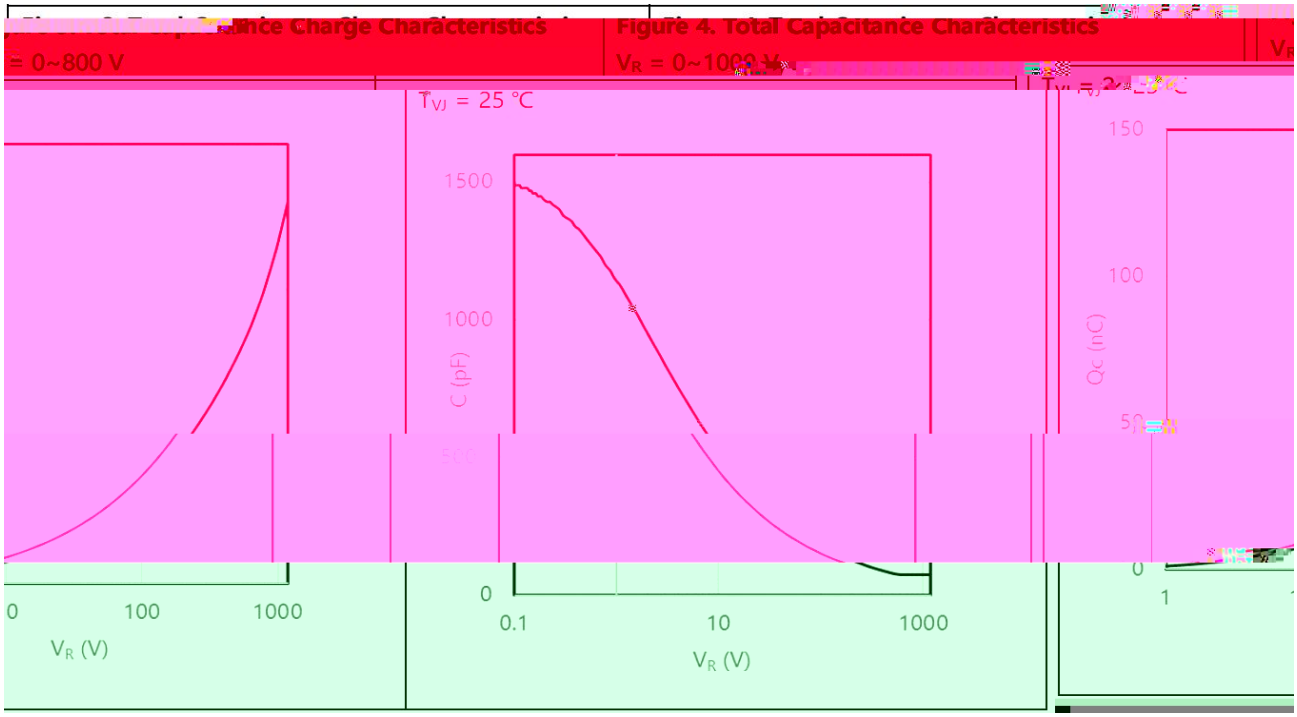



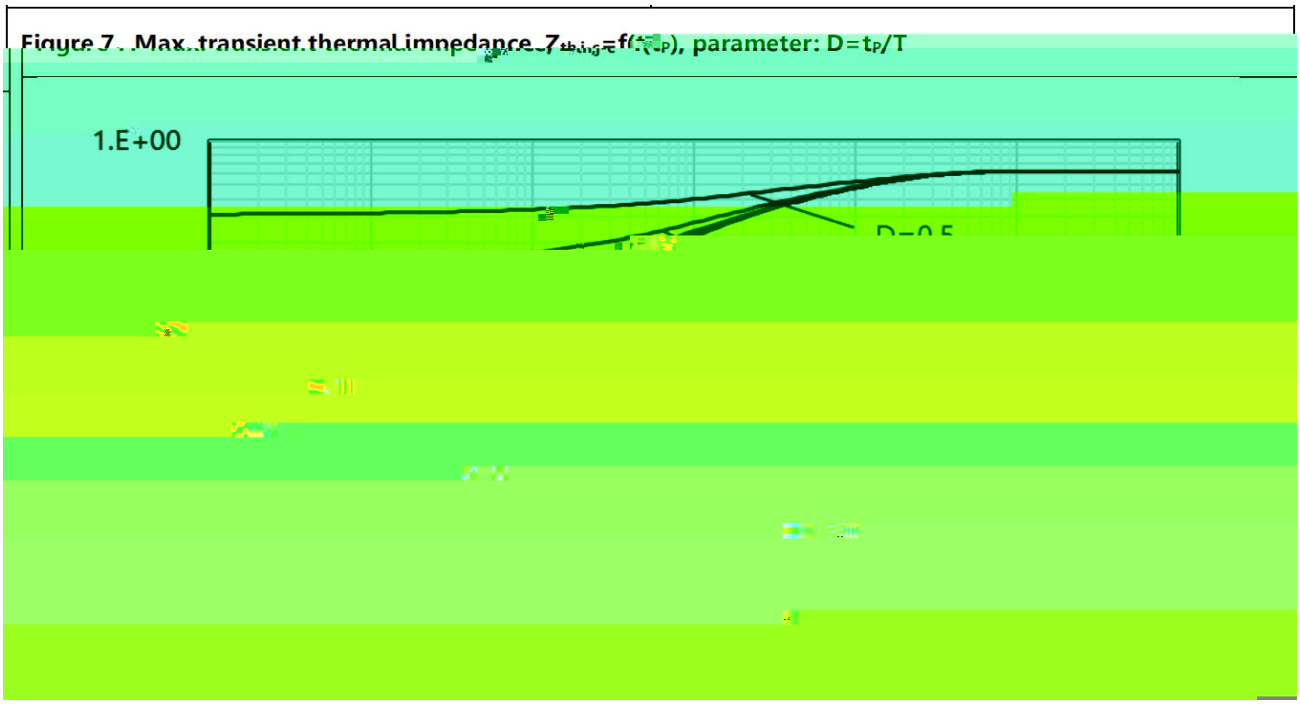
1.E+00
D=0.5