## Electrical Characteristics at Tc=25°C unless otherwise specified

| Characteristics | Test Condition | Symbols | Min | Typ | Max | Units |
|---|---|---|---|---|---|---|
| Drain-Source Breakdown Voltage | $V_{GS}$=0V, $I_D$=250μA | $BV_{DSS}$ | 650 | - | - | V |
| Drain-Source Leakage Current | $V_{DS}$ =650 V, $V_{GS}$ = 0 V | $I_{DSS}$ | - | - | 1 | μA |
| Gate Leakage Current | $V_{GS}$ = ± 30 V, $V_{DS}$ = 0 V | $I_{GSS}$ | - | - | ±100 | nA |
| Gate-Source Threshold Voltage | $V_{DS}$=$V_{GS}$, $I_D$=250μA | $V_{GS(th)}$ | 2 | - | 4 | V |
| Drain-source on-state resistance | $V_{GS}$=10V, $I_D$=15A | $R_{DS(ON)}$ | - | 120 | 130 | mΩ |
| Input Capacitance | $V_{GS}$=0V<br>$V_{DS}$=50V<br>f=1.0MHz | $C_{iss}$ | - | 1950 | - | pF |
| Output Capacitance | | $C_{oss}$ | - | 245 | - | |
| Reverse Transfer Capacitance | | $C_{rss}$ | - | 29 | - | |
| Turn-on Delay Time(Note2) | $V_{DS}$ =300V<br>$I_D$ = 30 A<br>$R_G$ =25Ω | $t_{d(on)}$ | - | 30 | - | ns |
| Rise Time(Note2) | | $T_r$ | - | 45 | - | |
| Turn-Off Delay Time(Note | | | | | | |

## Ratings and Characteristic Curves

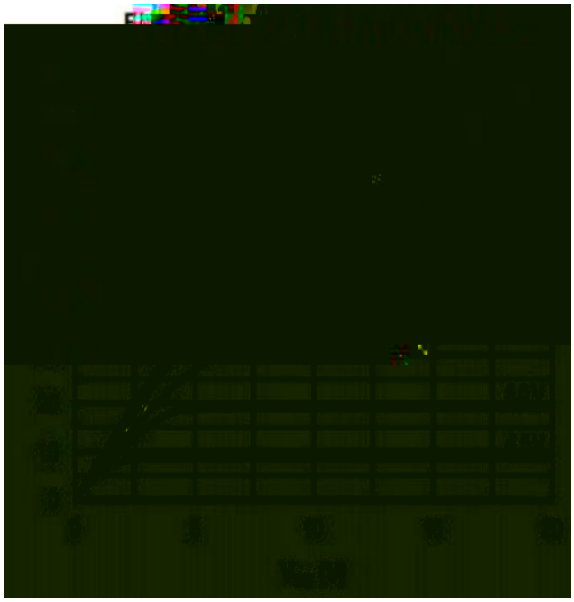

Figure2. Transfer Characteristics

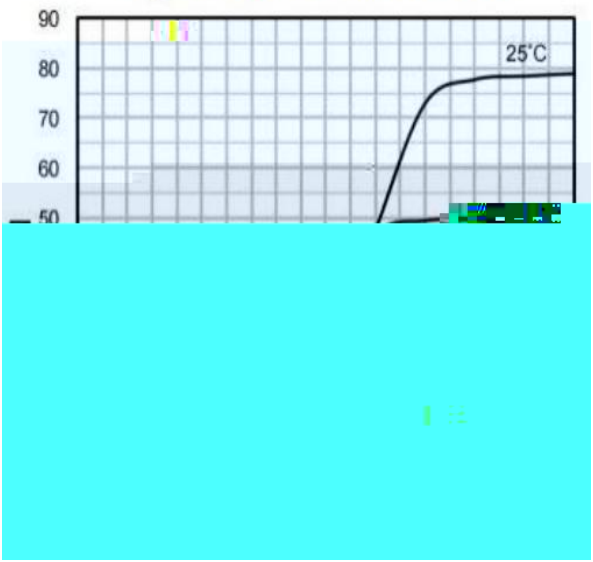


Figure 3. On-Resistance VS.Drain Current

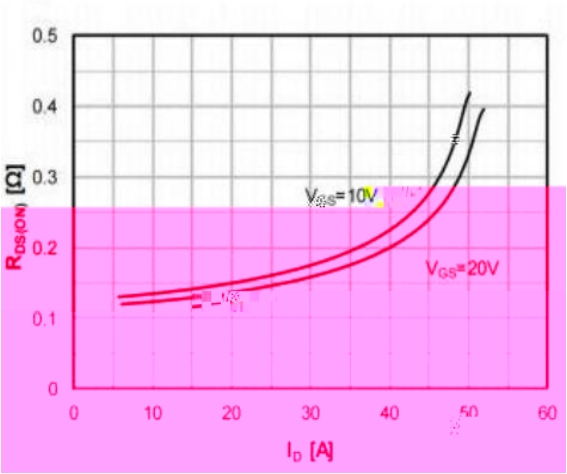




Figure 5. Gate Charge

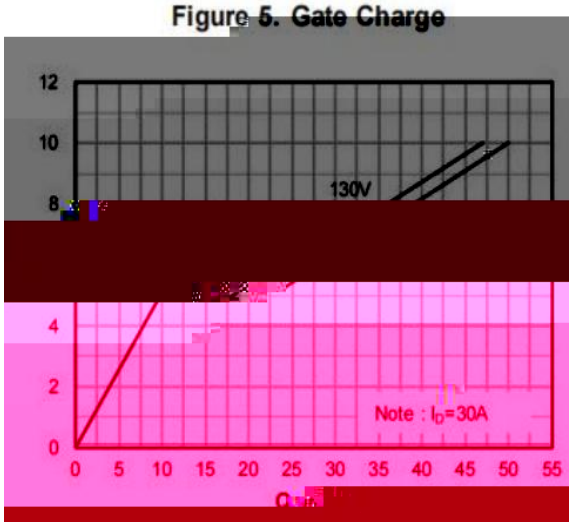


Figure 6.Body Diode Forward Voltage

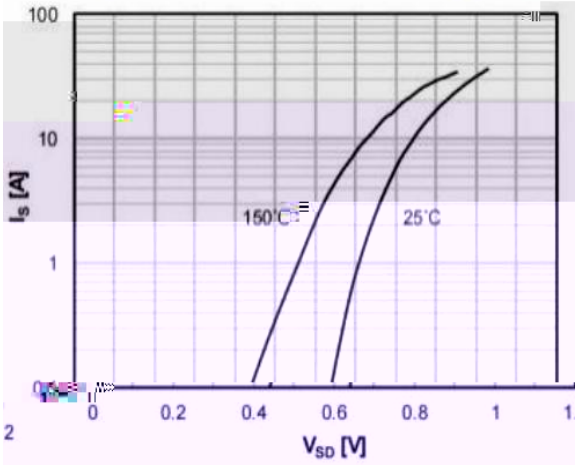

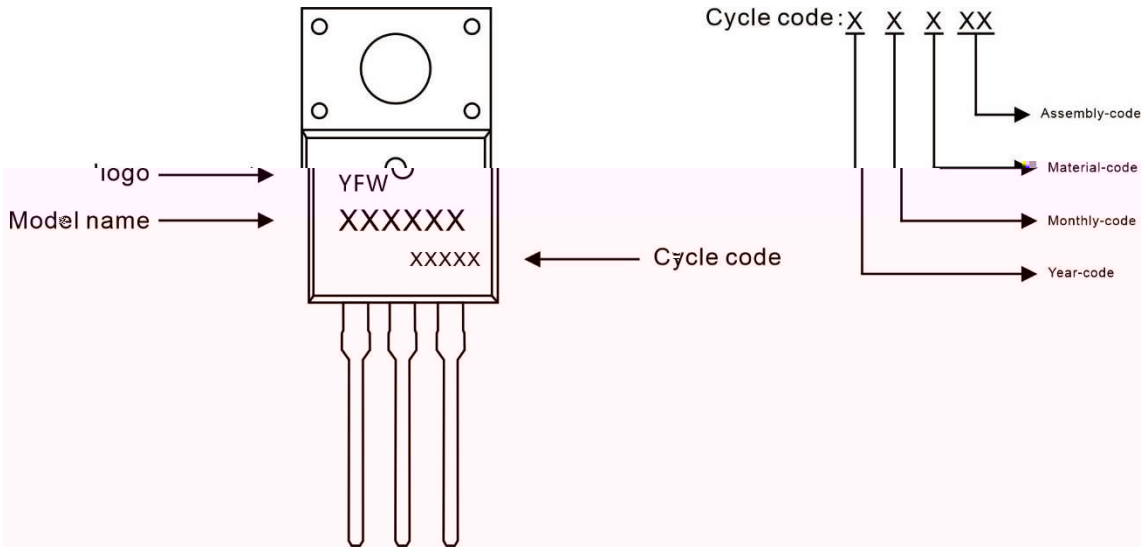


| | | | | |
|---|---|---|---|---|
| | TO-220F | 0.06oz(1.74g) | 50pcs/tube | 1000PCS/Box 5000PCS/Carton |

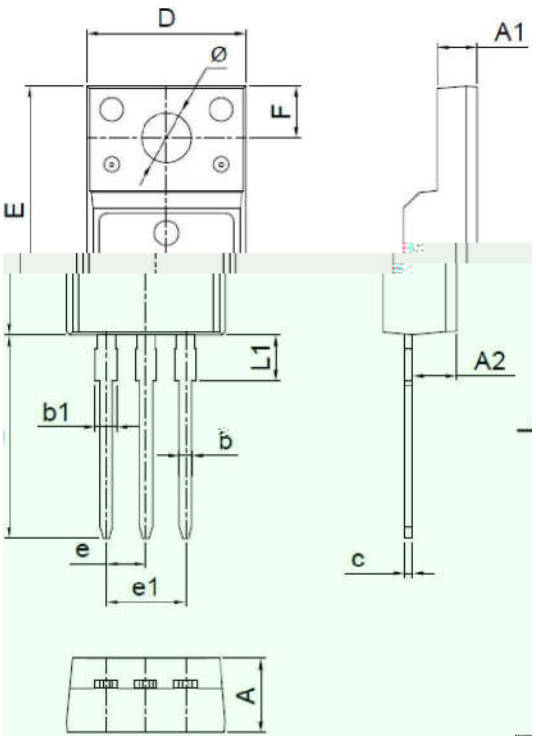


| | | | | |
|---|---|---|---|---|
| | | | | |
| A | 4.50 | 4.90 | 0.177 | 0.193 |
| A1 | 2.34 | 2.74 | 0.092 | 0.108 |
| A2 | 2.66 | 2.86 | 0.105 | 0.113 |
| b | 0.75 | 0.85 | 0.030 | 0.033 |
| b1 | 1.24 | 1.44 | 0.049 | 0.057 |
| c | 0.40 | 0.60 | 0.016 | 0.024 |
| D | 10.00 | 10.32 | 0.394 | 0.406 |
| E | 15.75 | 16.05 | 0.620 | 0.632 |
| e | 2.44 | 2.64 | 0.096 | 0.104 |
| e1 | 4.88 | 5.28 | 0.192 | 0.208 |
| F | 3.10 | 3.5 | 0.122 | 0.138 |
| L | 13.50 | 13.90 | 0.531 | 0.547 |
| L1 | 2.90 | 3.30 | 0.114 | 0.130 |
| Φ | 3.10 | 3.30 | 0.122 | 0.130 |